Published: 11-May-2011

Body Closures - Body Closures

Description and Operation

Body Protection

WARNING: The weight of the armoured components fitted to the vehicle are far in excess of those fitted to the standard vehicle. As an example, the windshield weighs approximately 100 Kg (220 lb). Therefore, always be aware of the weight of components and have suitable lifting equipment available before attempting to remove any component from the vehicle.

Body Shell

Armoured cell

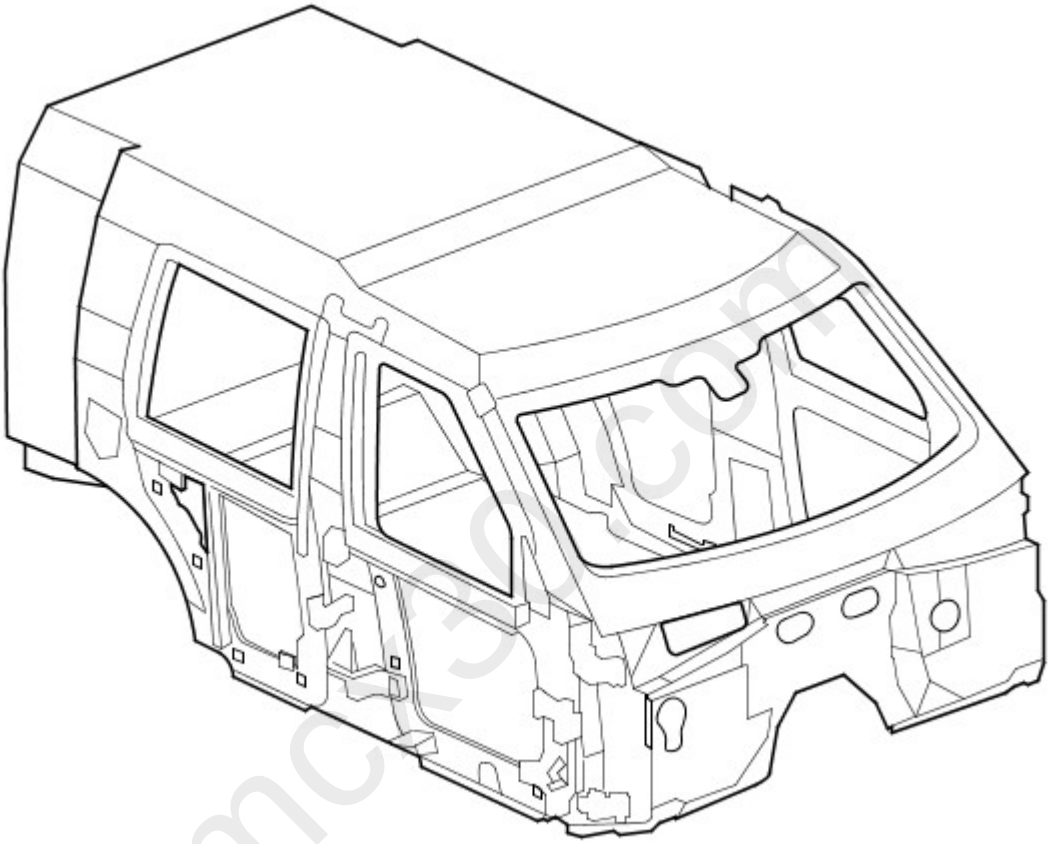

E101511

The vehicle passengers are protected by a steel armoured cell assembled inside the vehicle's bodywork. The cell provides armoured protection to the following areas of the vehicle:

- Bulkhead
- Roof
- Rear three-quarter panels
- 'A' posts
- 'B/C' posts
- 'D' posts
- Sills
- Floor pan

In addition to the floor pan armour, floor protection is also provided by a woven Kevlar blanket, available as an optional fit.

Armoured cell in position

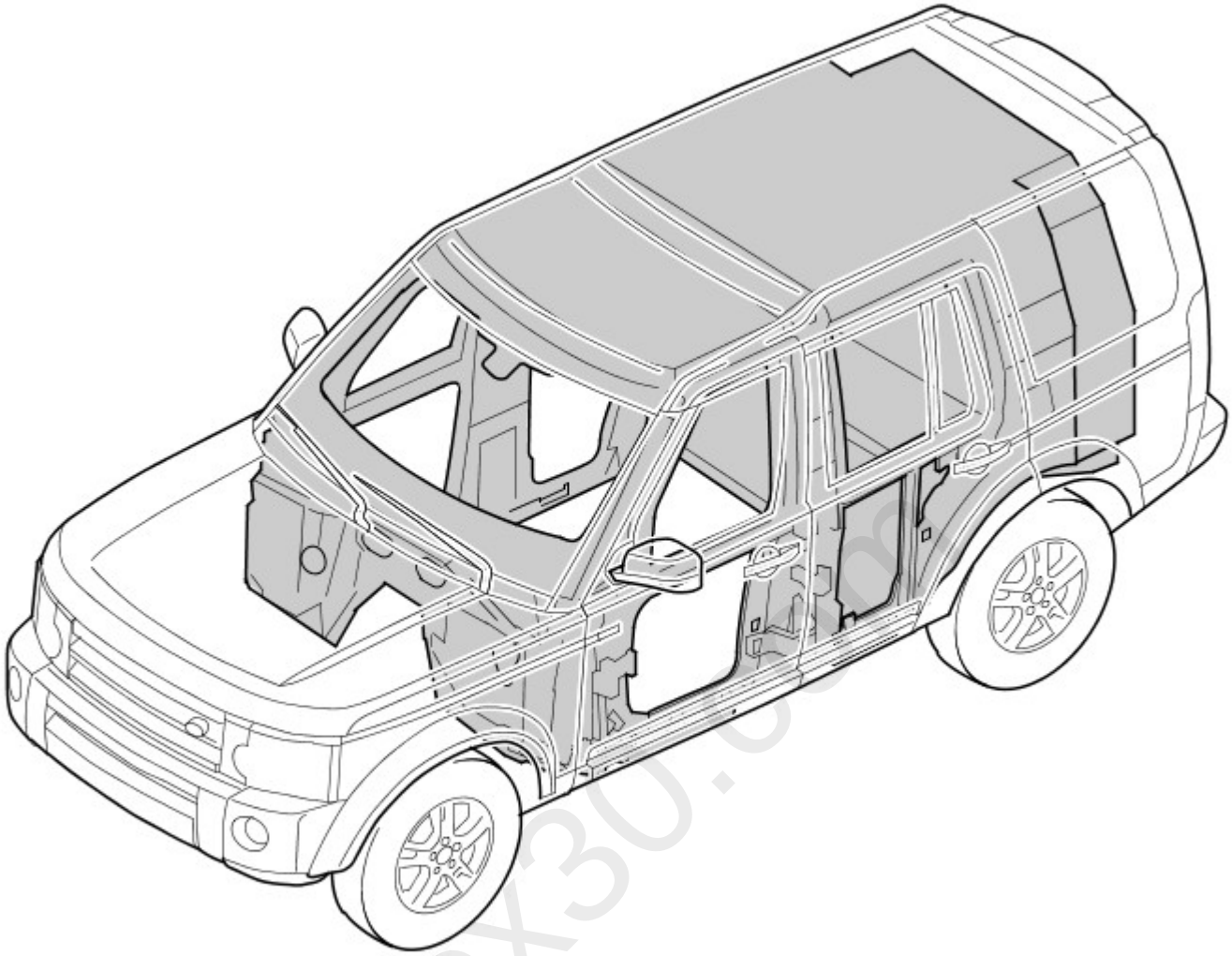

E101513

Doors and Tailgate

The vehicle's doors are reinforced with steel armour, with the exception of the tailgate which remains standard. The armoured cell offers rear-end protection to the vehicle's occupants with the option of either:

- a solid armoured rear end with armoured window; or
- an armoured rear access with armoured window.

Armoured cell rear-access

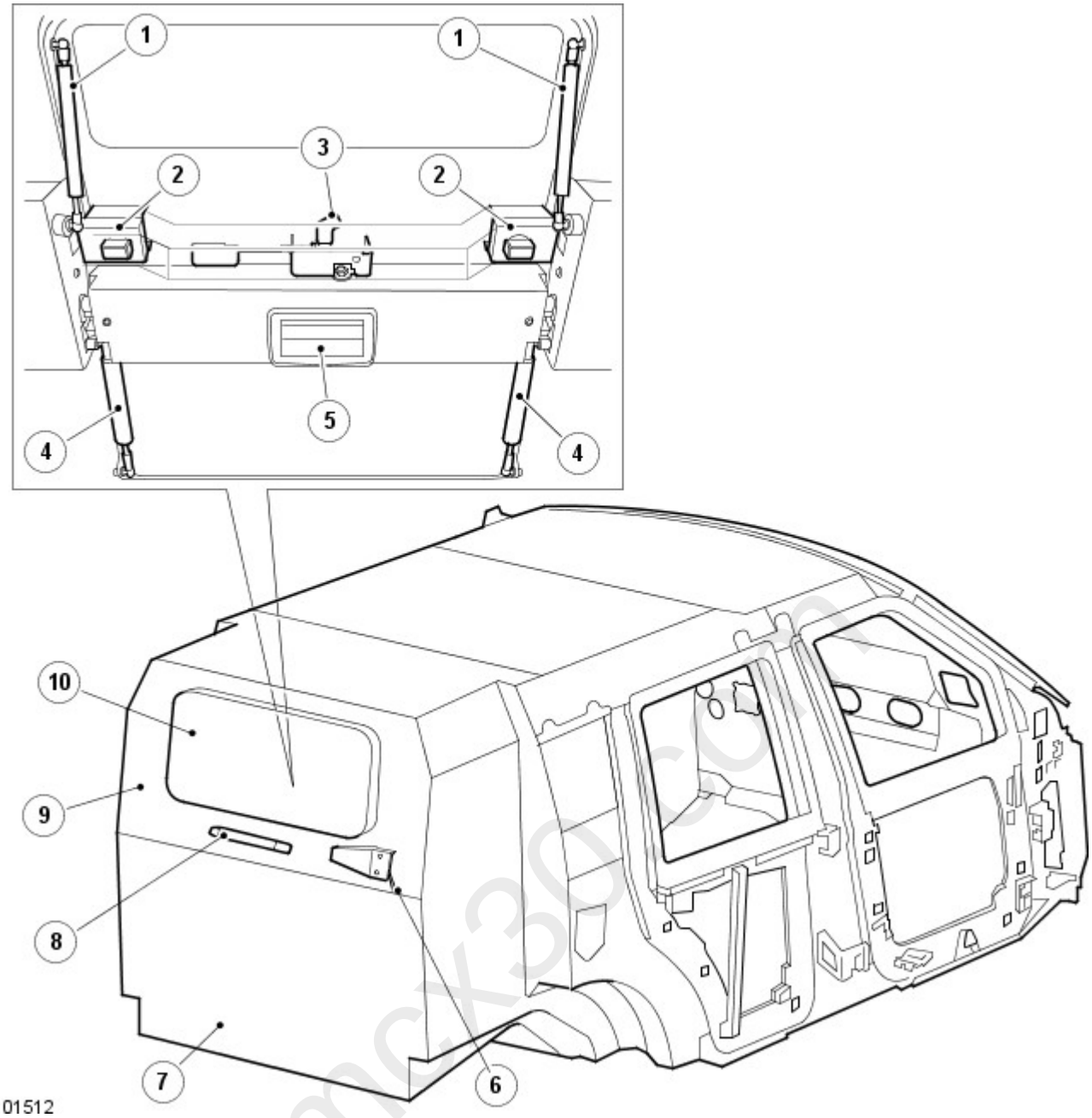

Item	Part Number	Description
1	-	Upper access panel - gas struts
2	-	Upper access panel - dead locks
3	-	Upper access panel – internal release lever
4	-	Lower access panel – gas struts
5	-	Lower access panel – internal release handle
6	-	Upper access panel – external release lever
7	-	Lower access panel
8	-	Upper access panel - grab handle
9	-	Upper access panel
10	-	Armoured glass window *

*

For additional information, refer to: Glass, Frames and Mechanisms (501-11, Description and Operation).

The armoured access option replicates the vehicle's tailgate by having upper and lower access panels. The access panels can be opened manually both internally and externally if the dead-locks are in the unlocked position. Gas struts fitted to the access panels aid their opening and reduce involuntary shutting.

Tailgate interior release button

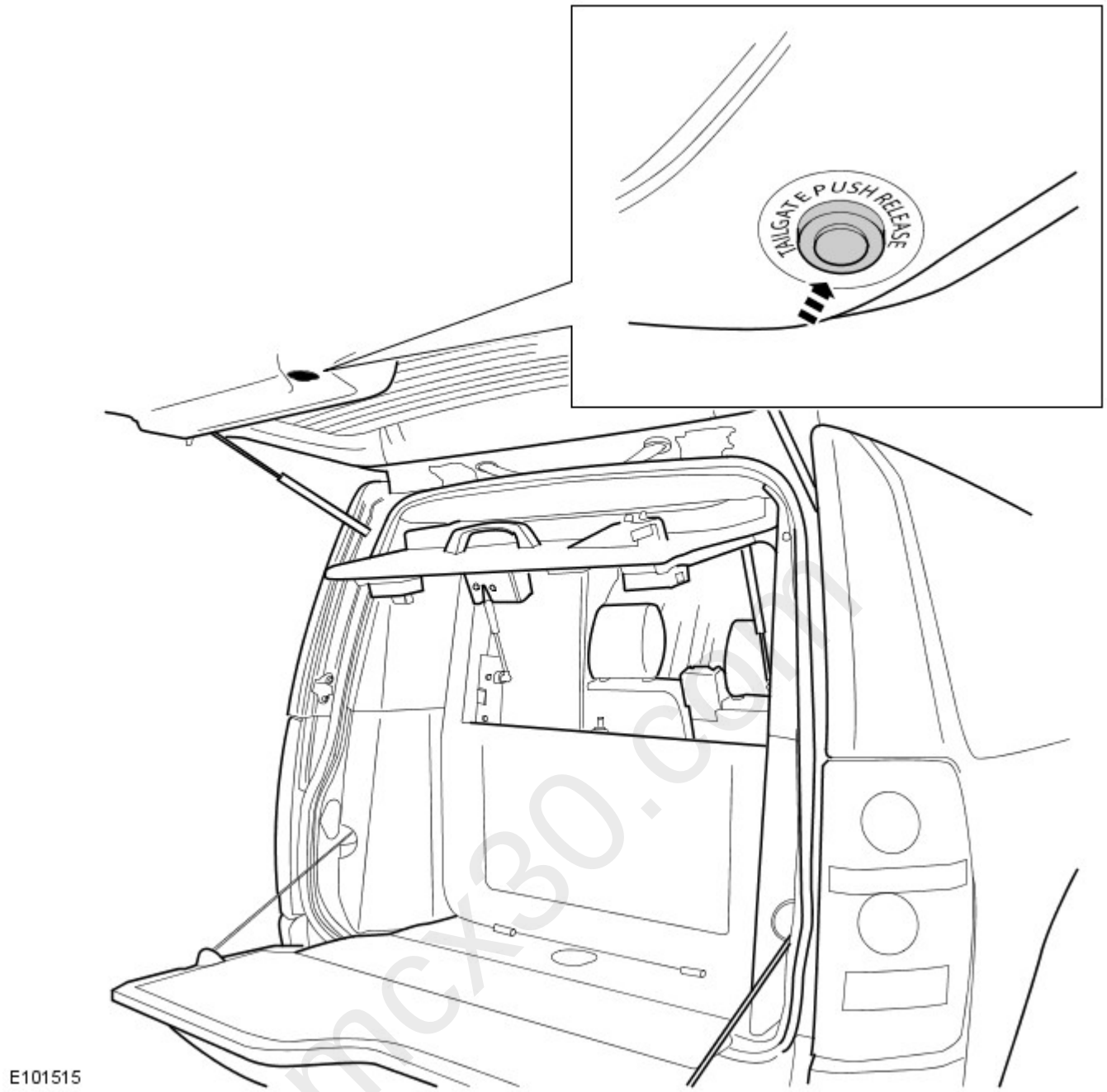

A release button fitted to the interior of the vehicle's upper standard tailgate provides access to the tailgate from inside the vehicle. The release button is a momentary type switch, wired in parallel to the standard release switch on the exterior tailgate handle.

The door hinges, spindles and door stop mechanisms, on the driver and passenger doors are reinforced to support the additional weight of the armour. Gas struts have been fitted to aid door opening and reduce involuntary shutting.

CAUTION: It is recommended that the driver and passenger doors are not opened until the vehicle has come to a complete stop. The combined effect of the vehicle's residual speed and the weight of the door could overcome the door stop mechanism.

Published: 11-May-2011

Body Closures - Liftgate Alignment

General Procedures

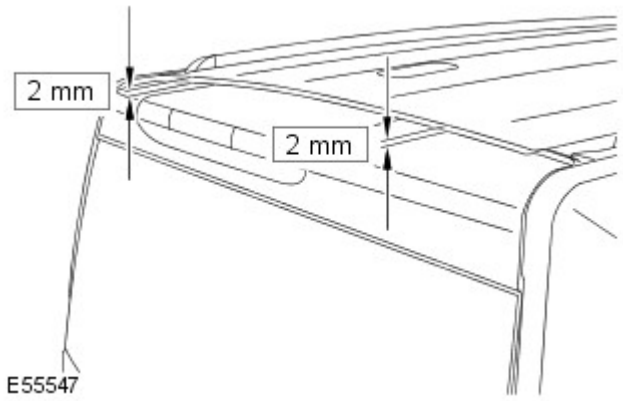

1. With the liftgate closed, check the alignment of the liftgate to roof panel. The liftgate should be central in its aperture. Profile of the liftgate to roof panel should be 2 mm below flush.

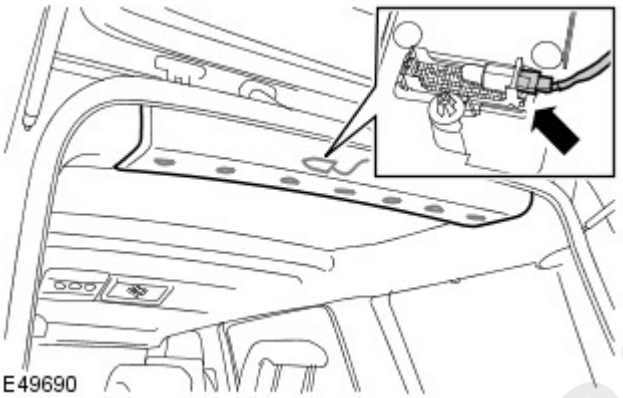

2. Remove the rear headliner trim panel.

- Release the 7 clips.
- Disconnect the electrical connector.

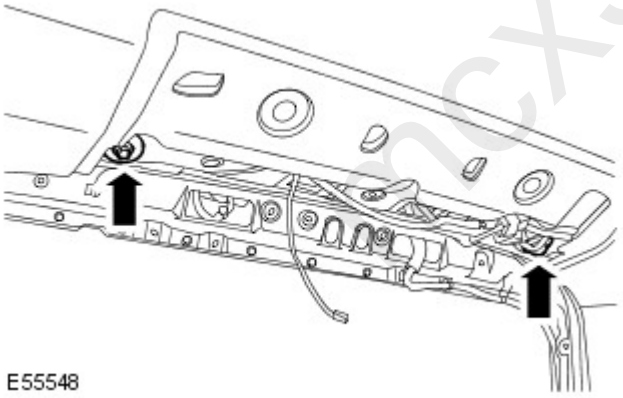

3. Loosen, but do not remove both liftgate hinge to body bolts.

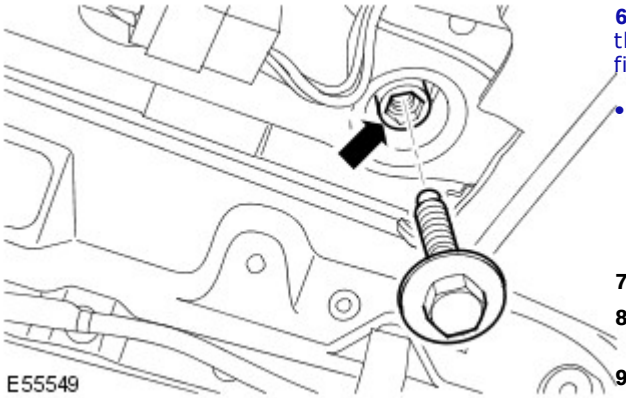

4. Position the liftgate central to the aperture.

5. Remove the LH liftgate to body bolt.

6. CAUTION: When setting the liftgate profile, make sure that the liftgate hinge NOT being adjusted has its retaining bolt fitted.

- NOTE: Turning the Allen key clockwise will raise the liftgate.

Using a 13 mm Allen key, adjust the LH liftgate hinge until a profile of 2 mm below flush to the roof panel is achieved.

- Install the bolt and tighten to 40 Nm (30 lb.ft).

7. Repeat the above procedure for the RH liftgate hinge.

8. Check for correct operation of the liftgate, and if necessary adjust the liftgate and tailgate strikers.

9. Install the rear headliner trim panel.

mcx30.com

- Connect the electrical connector.
- Secure with the clips.

mcx30.com

Published: 11-May-2011

Body Closures - Fuel Filler Door Assembly

Removal and Installation

Removal

1. Disconnect the battery ground cable.
   For additional information, refer to: Specifications (414-00 Battery and Charging System - General Information, Specifications).
2. Remove the fuel filler interlock catch assembly.
   For additional information, refer to: Fuel Filler Interlock Catch (501-03 Body Closures, Removal and Installation).
3. WARNINGS:

   Place the vehicle in a well ventilated, quarantined area and arrange ' No Smoking/Petrol Fumes' signs about the vehicle.

   Do not carry or operate cellular phones when working on or near any fuel related components. Highly flammable vapors are always present and may ignite. Failure to follow these instructions may result in personal injury.

   Remove the fuel filler door and inner assembly.

   - Open the fuel filler door and remove the cap.
   - Using a 2mm metal rod, pierce the inner assembly and release the 4 clips.
   - Release from the filler neck.
   - Replace the filler cap.

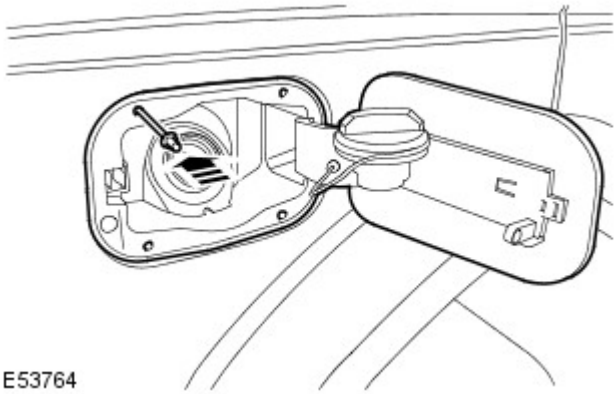

E53764

4. Remove the fuel filler door.
   - Release the clip.

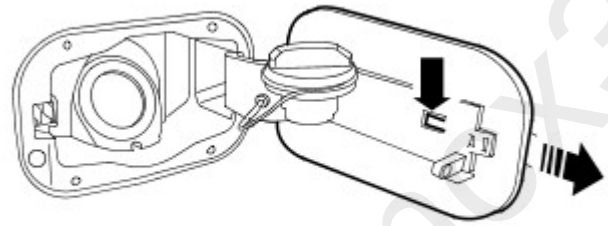

E55132

Installation

1. Install the filler door.
2. Install the fuel filler door assembly.
   - Clean the component mating faces.
   - Install the filler cap.
   - Close the fuel filler door.
3. Install the fuel filler interlock catch assembly.
   For additional information, refer to: Fuel Filler Interlock Catch (501-03 Body Closures, Removal and Installation).
4. Connect the battery ground cable.
   For additional information, refer to: Specifications (414-00 Battery and Charging System - General Information, Specifications).

mex30.com

Published: 11-May-2011

Body Closures - Fuel Filler Interlock Catch

Removal and Installation

Removal

1. Disconnect the battery ground cable.
   For additional information, refer to: Specifications (414-00 Battery and Charging System - General Information, Specifications).
2. Remove the C-pillar lower trim panel.
   For additional information, refer to: C-Pillar Lower Trim Panel (501-05 Interior Trim and Ornamentation, Removal and Installation).
3. Remove the fuel filler interlock catch assembly.
   - Remove the clip.
   - Release the cable.
   - Disconnect the electrical connector.

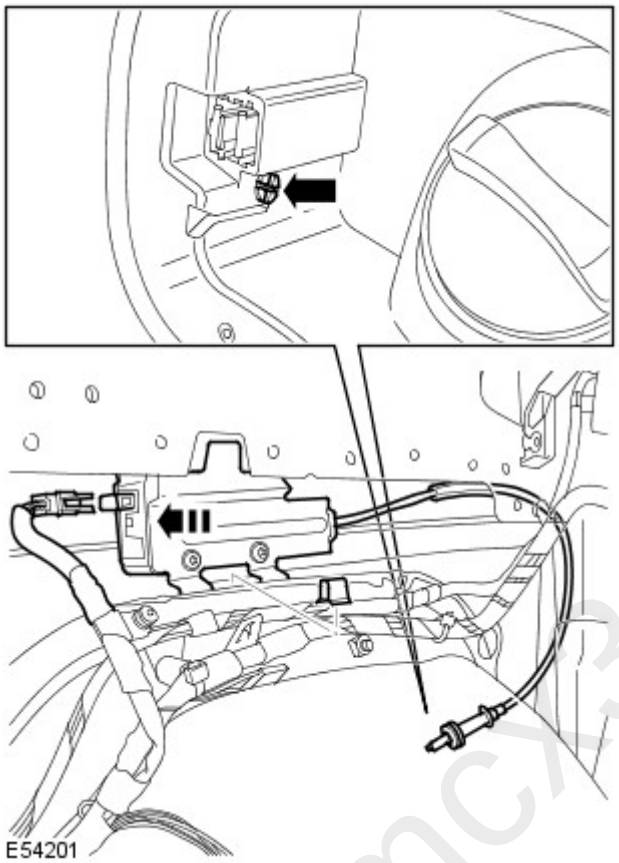

4. Remove the solenoid.
   - Remove the 2 Torx screws.
   - Release the cable.

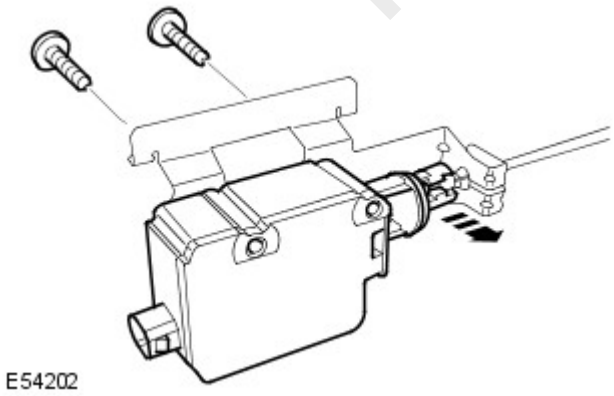

mcx30.com

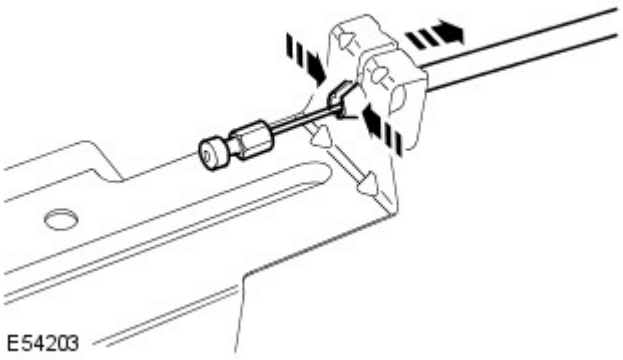

5. NOTE: Do not disassemble further if the component is removed for access only.

Release and remove the cable.

- Release the clip.

Installation

1. Install the cable.

- Secure the clip.

2. Install the solenoid.

- Attach the cable.
- Install the Torx screws.

3. Install the fuel filler flap latch assembly.

- Connect and secure the electrical connector.
- Carefully secure the clips.

4. Install the C-pillar lower trim panel.
For additional information, refer to: C-Pillar Lower Trim Panel (501-05 Interior Trim and Ornamentation, Removal and Installation).

5. Connect the battery ground cable.
For additional information, refer to: Specifications (414-00 Battery and Charging System - General Information, Specifications).

mcx30.com

Body Closures - Liftgate

Removal and Installation

Removal

1. Open the liftgate and tailgate.
2. Disconnect the battery ground cable.
   For additional information, refer to: Specifications (414-00 Battery and Charging System - General Information, Specifications).
3. Remove the liftgate upper trim panel.
   - Release the 4 clips.

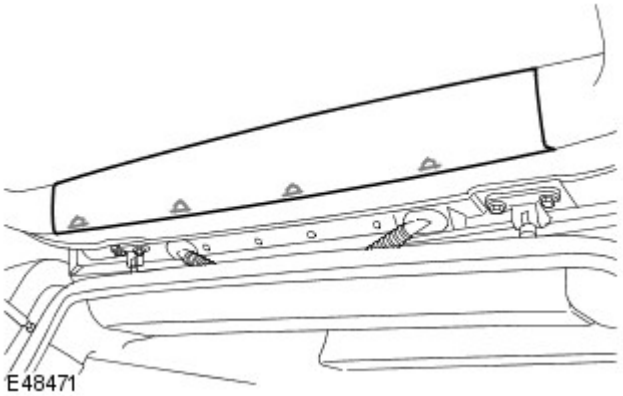

4. Remove the liftgate side trim panel.
   - Release the 5 clips.
   - Repeat the above procedure for the other side.

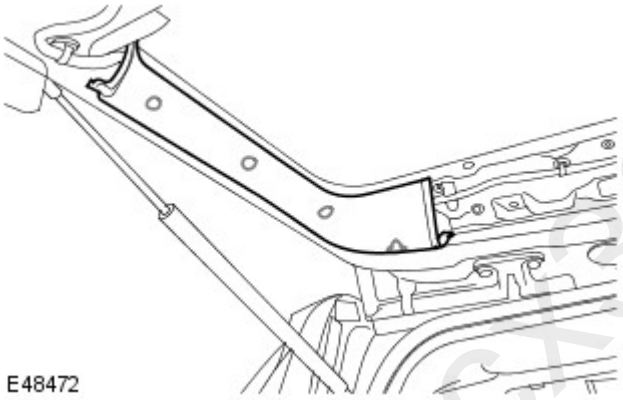

5. Remove the rear headliner trim panel.
   - Release the 7 clips.
   - Disconnect the electrical connector.

6. Disconnect the washer jet hose.
   - Release the grommet.

mcx30.com

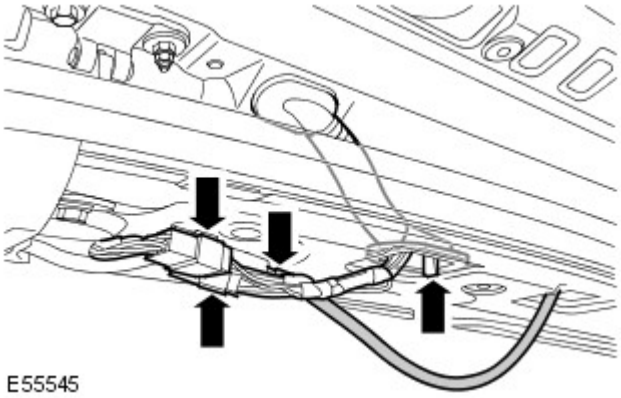

7. Release the liftgate wiring harness.

- Disconnect the 2 electrical connectors.
- Release the grommet.

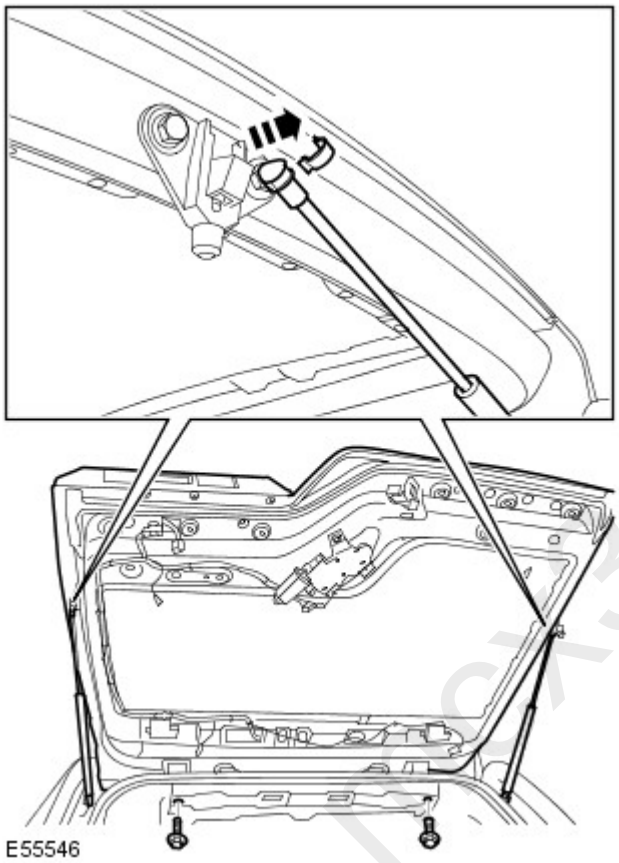

8. With assistance, remove the liftgate assembly.

- Release the clips and disconnect the struts.
- Remove the 2 bolts.

fox30.com

Installation

1. With assistance, install the liftgate assembly.

- Tighten the bolts to 40 Nm (30 lb.ft).
- Connect the struts and secure with the clips.

2. Attach the liftgate wiring harness.

- Install the grommet.
- Connect the electrical connectors.

3. Connect the washer jet hose.

- Install the grommet.

4. Install the liftgate side trim panel.

- Secure with the clips.
- Repeat the above procedure for the other side.

5. Install the liftgate upper trim panel.
   - Secure with the clips.
6. Connect the battery ground cable.
   For additional information, refer to: Specifications (414-00 Battery and Charging System - General Information, Specifications).
7. Check and adjust the liftgate to roof panel profile.
   For additional information, refer to: Liftgate Alignment (501-03 Body Closures, General Procedures).

mcx30.com